ISSN 1816-6075 (Print), 1818-0523 (Online)
Journal of System and Management Sciences
Vol. 1 (2011) No. 1, pp. 59-69

Research on the scale-planning model for the coal logistics center based on coal logistics network planning

Zongxi Liu[1], Qilan Zhao[1]
[1] School of Economics and Management, Beijing Jiaotong University, China
lzx0209@126.com; zhaoqilan@126.com

Abstract: The scale planning of the coal logistics center plays an important role in coal logistics network planning. Based on the coal logistics network planning, this paper analyses the coalmine production capacity, transportation capacity, coal demand and other factors, then brings forward the demand trend coefficient on that basis. Further, the authors construct a scale-planning model for the coal logistics center which is used to determine the scale of the coal logistics center's main part - the coal storage yard. Finally, the paper carries out an application case study.

Keywords: Coal Logistics Center, Logistics Network, Demand Trend, Scale Planning

1. Introduction

Rational planning of coal logistics network and scale of network node (coal logistics center) plays a vital role in the formation of integration of coal's production, transportation and marketing. It can balance between supply and demand of coal resources and ensure the flow of coal resources in time and space on time, and promote the development of macroeconomic.

Considering the distribution of coal resources, railway and waterway transportation capacity, distribution of coal demand point (power plant), and coal demand to plan the coal logistics network is essential. It is an important way to form an integrated coal Logistics system which is from coalmine to power plant, and ensure the supply of coal. The scale planning of the coal logistics center plays an important role in the entire logistics network planning.

Determine a reasonable scale of the coal logistics center has an important significance. It can ensure future need of coal, optimize the coal logistics process, control the logistics cost and improve overall operational efficiency.

The existing theories of research on logistics center are always about logistics center location and interior design. There is little of research about the scale planning. The Japanese researcher Eiichi Taniguchi 1999 has done some research on size and location planning in the situation of more than one distribution center, and introduced a bi-level programming model. Chinese researcher Xizhou Zhang and Shilei Yin (2006) suggest that it may through crosswise contrast domestic and foreign distribution center's construction scale to determine the newly built distribution center's scale. Shidong Chen and Xiaoming Liu 2005 use the space-time consumption method to calculate the scale of a distribution park. Hongzhi Guan 2005 suggests that the area of a logistics center not only relates to its throughput but also depends on the processing capability and the organizing level of the center. His paper proposes an article demand model and an article supply model for a logistics center, and then based upon the hypothesis of supply and demand equilibrium; a forecasting model on the scale of a logistics center is presented.

In view of the logistics center where just store coal this kind of specific commodity, some scholars proposed about the tentative plan that establishing the coal logistics center. They have pointed out the existence's question of coal logistics, the feasibility of setting up the coal logistics center and the operation way of coal logistics center, and so on (Zhao, 2001). But there is not many book or paper which conducts a deep research regarding coal logistics center's scale determination. Moreover, also very little has the scholar base on the coal logistics network planning's background as well as the consideration demand tendency to study the influence of the coal logistics center.

This article gives an overall evaluation in electricity coal storage characteristic, the power plant actual situation, the transportation capacity and the coalmine production capacity factors and so on. Under the consideration of coal demand's tendency, the research gives a method to determine the coal logistics center's main scale.

2. The Network Functional Mapping of the Coal Logistics Centers and Their Scale Influencing Factors

The coal logistics network consists of coal sources (i.e. coal mine), coal logistics channels, coal logistics centers, end-users, as shown in Figure 1. The Focus of this study - coal logistics centers, to where the coal will be transported

after landing via the upstream docks, locate in the middle of the coal logistics network. After coal blending and other processing operations in here, the coal will be distributed to every needed power plant or for external sales.

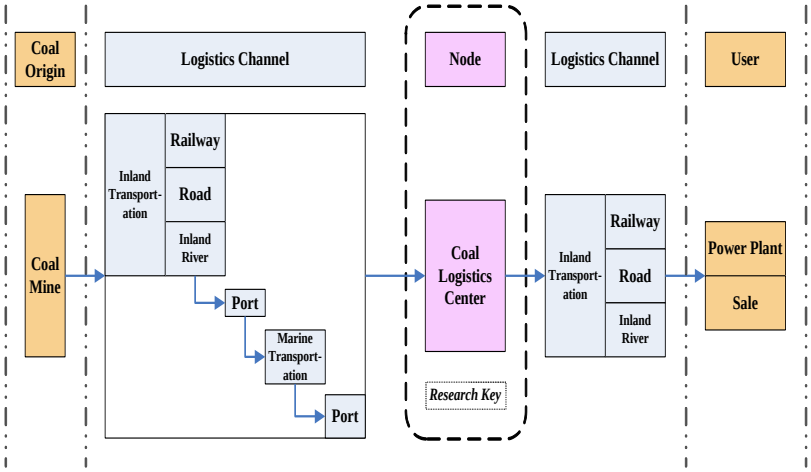

Fig. 1: Coal logistics network schematic drawing.

According to the coal logistics centers' functional mapping, we can group the scale-influencing factors for coal logistics centers into five categories: the types and physical characteristics of coal, coal demand, production and transport capacity constraints, stacking height restriction, the average turnover time.

2.1. The types and physical characteristics of coal

The power plants need varieties of coal to generate electricity, such as bituminous coal, anthracite coal, fat-gas coal, gas coal, lean coal, meager-lean coal, lignite and so on. For different types of coal, the density, heat value and other physical characteristics are different. The density of coal will affect its stacking size, and heat value will affect the per-unit coal consumption for generating electricity.

2.2. Coal demand

The scale of coal logistics centers needs to meet the logistics demand corresponding to a certain amount of coal demand. The classification of the coal demand from demand time is the current demand and potential demand; from use is self-use demand and external sales demand.

Current demand directly influences the scale of the current logistics centers. The greater the current coal demand is, the larger the logistics centers requires, and vice versa. The ascertainment of current coal demand is closely linked to

per-day coal consumption at power plants, coal storage days, seasonal fluctuations, space service scope and other factors.

Because the power generation volume is under the impact of seasons, the demand for the same kind of coal is also changing with the seasons. We can use a specific coefficient to reflect the seasonal fluctuations in coal consumption for power plant, and in this paper we name this coefficient as time correlation coefficient.

Potential coal demand is the pull demand quantity by the future development. It analyzes the changes in demand from the perspective of the dynamic and thus is the variation trend of current demand (Zhao, 2004). To quantitatively describe the future coal demand variation, this paper proposes a "demand trend coefficient" concept. The demand trend coefficient is the quantitative index to describe coal demand variation trend. If its value is between 0 and 1,that means negative growth of the future demand; if its value is bigger than 1,that means positive growth of the future demand. This factor is related to the variation trend of predicted electricity generating volume and per-unit coal consumption for generating electricity.

Self-use demand and external sales demand: The coal stored and processed in coal logistics centers is partly used to meet every power plant’s requirement within the logistics centers service scope and partly used for external sales. Therefore, according to the proportion of self-use and external sales, the scale of the logistics centers can be amended.

2.3. Production and transport capacity constraints

Upstream coal mines are the sources of the required coal for power plants, and rail and water route transport capacity determines the maximum capacity of coal transport channels. These two factors play a restraining role when the coal logistics network meets the coal demand. Therefore, in the coal logistics network planning and ascertainment of coal logistics centers scale, it is necessary to consider the relationship between the coal production capacity and actual demand and make some reasonable amendments to the scale of coal logistics centers.

2.4. Stacking height restriction

Coal stacking height can be affected by the storage volume, coal quality, stacking methods, machinery and equipment as well as other factors. For example, the maximum extension of machinery and equipment will limit the stacking height of the coal, and thus indirectly affects the scale of coal storage

yard. The stacking height of coal storage yard is generally about 10 meters.

2.5. The average turnover time

The shorter the average turnover time of the coal logistics centers is, the smaller the scale needs to be. The average turnover time is related to timeliness requirements and efficiency of the operation.

The different timeliness requirements for coal of the power plants also result in different average turnover time of the coal logistics centers. The higher the timeliness requirements are the shorter the average turnover time of the coal logistics centers will be. Each power plant's timeliness requirements can be measured by the storage days per period of the coal they needed. The storage days per period of the coal is comprehensively determined by practical situation of power plants and nation's related management standard.

Operational efficiency also affects the average turnover time. On the premise of same logistics workload, the higher the efficiency of logistics operations such as transportation, loading and unloading, flitting is the shorter the average turnover time of the coal logistics centers will be. In addition, the level of mechanization and automation also affects operational efficiency. The higher the level of mechanization and automation of the coal logistics centers is, the less the storage time of coal will be, thus, the faster the turnover speed will be.

$$S_k = \sum_{i=1}^{n} \frac{\lambda \times \alpha_k \times (\theta \times q_i) \times d_i \times F_i}{\rho_i \times h_i},\ i = 1, 2, \cdots, n \quad (1)$$

$$\alpha_k = \frac{f_k(e,c)}{f_0(e,c)} \quad (2)$$

$$f_k = \max(e_{k_l} \times c_{k_l}),\ l = 1, 2, \cdots, k \quad (3)$$

$$q_i = \min(Q_1, Q_2, Q_3)/365 \quad (4)$$

Where,

S_k ——the scale of the coal storage yard in kth year (m2, current year k=0)

n ——the number of the varieties of the coal (with no dimension)

λ ——stacking shape coefficients (with no dimension)

q ——daily coal storage for self-use (t)

θ ——the ratio between total coal and the coal for self use (with no dimension)

d ——days of one coal‘s storage period (with no dimension)

F ——coal’s time correlation coefficient (with no dimension)

P ——coal’s density (t/m3)

h ——the stacking height of the coal (m)

α ——coal’s demand trend coefficient (with no dimension)

e ——designed power energy output (Kwh)

c ——coal consumption per unit of generation (g/ Kwh)

f_k ——maximum demand for coal in kth year (t)

Q_1 ——coal‘s production capacity for one year (t)

Q_2 ——maximum transport capacity of transportation corridor (t)

Q_3 ——power plant’s total coal consumption per year within the service scope of logistics center (t)

Among all, the prospective designed generation e and coal consumption per unit of generation c need to be acquired by prediction, as well as other factors such as history data, relevant policy, management level, technology innovation, etc. The common prediction approaches include linear regression, trend extrapolation, moving average, exponential smoothing, etc. Due to we’ve regard seasonal fluctuation as an isolate part to be considered in scale-determining model, we can only consider the effect of trend here. In this paper, Holt double parameters linear exponential smoothing will be adopted to predict, the method is discussed next:

Holt prediction model:

$$b_t = \gamma(A_t - A_{t-1}) + (1-\gamma)b_{t-1} \quad (5)$$

$$A_t = \beta x_t + (1-\beta)(A_{t-1} + b_{t-1}) \quad (6)$$

$$P_{t+m} = A_t + b_t m \quad (7)$$

Where,

A_t ——smoothed value of the Predictive value;

β ——Smoothing coefficient of the predictive value;

b_t ——smoothed value of the trend value;

γ ——Smoothing coefficient of the trend value;

P_{t+m} ——the predictive value at $(t+m)^{th}$.

In regard to the model established in this paper, the main parameters could be classified into 4 basic types, namely parameters of coal's variety and physical characters, parameters of demand of the coal, parameters of limitation of the stacking height, and parameters of turnover, the way of determination is introduced as follow.

(1) Parameters of coal's variety and physical characters

The number of the varieties of the coal n

The number of the varieties of the coal n is identified according to the power plant's actual situation. The coal which is used by the power plant to generate electricity include lots of varieties such as bituminous coal, anthracite, gas fat coal, gas coal, meager coal, meager lean coal, lignite and so on. Owing to different qualities of different coal, there will be distinction in power generating, as a result, the demand will be different while generating.

Stacking shape coefficients

The coal's stacking shape could be seen as prismatic table approximately, see figure2. According to the geometry relationship between prismatic table and pyramid, we can deduct stacking shape coefficients range from 2.37 to 2.71.

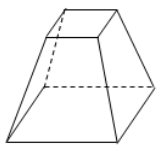

Fig. 2: Stacking shape.

Coal's density

Coal's density is different from the coal's variety. In normal situation, various coal's densities can be acquired in the following table.

Table 1: Various coal's densities

Variety of coal	Coal's density(T/m3)
Fine coal granule	0.75～1.00
Lignite	0.65～0.78
Dry anthracite	0.80～0.95
New-made pulverized-coal	0.45～0.50
Sedimentary pulverized coal	0.80～0.90

(2) Determination of related parameters for coal demand

Daily stock for self-used coal

Daily stock for self-used coal equals yearly stock for self-used coal divided by 365.Self-used coal in storage requires comprehensive consideration of the coal mine capacity, railway & waterway capacity limitation and demand of power plants.

Coal time correlation coefficient

Coal time correlation coefficient can reflect the seasonal fluctuation of the demand for electricity coal, which is used to correct preliminarily determined size values. Coal time correlation coefficient is equal to the ratio of the maximum and mean on daily coal consumption.

Demand trend coefficient

Demand trend coefficient is determined by the future demand changes of coal. In the next period of time, planning output of electricity and unit power coal consumption will change according to a certain trend. For example planning output of electricity is influenced by the national macro strategy, policy, enterprise's own development planning and other factors. At the same time unit power coal consumption is influenced by improvement of enterprises management level and innovation of technology and equipment. Therefore coal demand will also change according to certain trend. According to the variation rules, we can plan the scale of coal logistics center a period of time. Thus logistics center scale satisfies the current demand and the future development with proper leading advances and variability.

Planning output of electricity e and unit power coal consumption c

Planning output of electricity and unit power coal consumption are informed by prediction, combining history data, relevant policy, management level and technical innovation. Linear regression, trend extrapolation, moving average, exponential smoothing are commonly used prediction methods.

Ratio of total and self-used coal

Ratio of total and self-used coal = (self-used coal+ sold coal)/self-used coal.

(3) Determination of related parameters for stacking height limitation

Stacking height is influenced by coal size, coal quality, stacking method and mechanical equipment capacity constraints.

(4) Determination of related parameters for circulation

A cycle of coal storage is determined by actual situation of Power plant and Relevant state regulations. As is provided in the electricity industry technology management regulations, there are 7-15 days for power plants whose coal is transported via national mainline railway and there are less than 5 days for power plants whose coal is transported directly from mine. Power plants whose

coal is transported by water, should consider coal storage duration according to ceasing transportation time.

3. Case Study

The Electric Power Company A plans to construct a coal logistics center for the unification allocation coal to region E's five power plants. The five power plants in region E use the anthracite, which density is 0.9 t/m3. The coal piles up 10 meters high, and storage for 15 days. The daily coal consumption maximum value and the average value ratio is 1.21. The coal uses for power plant itself and for sale ratio is 4:1. In 2007-2010, the data of the five power plants in region E that annual power energy output and unit electricity generation coal consumption data as shown in Table 2.

Table 2: 2007-2010 Power energy output and unit electricity generation coal consumption in region E (Kwh×108, g/Kwh).

Year	2007	2008	2009	2010
Power Energy Output	91.00	100.10	110.11	121.12
Unit Electricity Generation Coal Consumption	366	364.17	362.35	360.54

According to growth need of the company, the power plants will increase the installed capacity in 2011-2020 years to increase the power energy output gradually. At the same time, estimated that along with carries on the strict control to the electricity generation with the coal amount, the power plant management level and saves consciousness enhancement, as well as the updating equipment, the new technology's application, the unit electricity generation coal consumption will be steady and have a slightly drop.

Eq. (5) - (7) are used to forecast using the formula each year planning power energy output and the unit electricity generation coal consumption to the region E in the year 2011-2020 year, and extracts the year coal consumption by these two data.

In guarantees the track time series the tremendous change, and under the equilibrium time sequence's chance fluctuation's premise, the predicted value smoothing factor takes 0.3, the tendency value's smoothing factor takes 0.5, forecasting result as shown in Table 3.

Table 3: 2011-2020 forecasting result of designed power energy output, unit electricity generation coal consumption and coal consumption in region E (Kwh×108, g/Kwh, t×104).

Year	2011	2012	2013	2014	2015
Power Energy Output	130.6	142.4	150.6	164.5	169.5
Unit Electricity Generation Coal Consumption	358.7	356.9	355.1	353.3	351.4
Coal Consumption	468.4	508.4	534.7	581.2	595.5
Year	2016	2017	2018	2019	2020
Power Energy Output	188.3	185.6	216.3	195.3	254.4
Unit Electricity Generation Coal Consumption	349.7	347.7	346.1	344.0	342.6
Coal Consumption	658.4	645.5	748.6	671.8	871.6

The coalmine production capacity and railway transportation capacity can be possible to satisfy the coal demand, according to Eq. (1)-(4), takes 2.6, and is 1.25, calculates the scale of the coal logistics center for region E shown in Table 4.

Table 4: Scale of the coal logistics center in region E.

	2013	2015	2020
Demand Trend Coefficient	1.2244	1.3637	1.9959
Scale (m2)	96008.56	106930.75	156506.65
Scale (Chinese acres)	144.01	160.40	234.76

Above to region E coal logistics center's scale reckoning, has given the coal logistics center for region E in the future ten year in trend of development, and the determined scale enables the coal logistics center to be able to satisfy the entire coal logistics network well the smooth movement.

Comparatively, if does not consider the demand tendency, in Eq. (1) except demand tendency coefficient, the calculate result of scale for region E coal logistics center is 141.98 Chinese acres. If carries on the coal logistics center plan according to this scale, then the coal logistics center can only satisfy the demand in the nearly 1-2 years, and unable to carry on to the future development.

4. Conclusions

This article based on the angle of the coal logistics network planning, considering the distribution of coal resources, the capacity of railway and waterway, the distribution of coal demand point (power plant), coal demand etc, and analyzing the factor that affect the scale of coal logistics center, then conclude this factors into five categories: the types and physical characteristics of coal, coal demand, production capacity and transport capability restriction,

stacking height restriction, the average turnover time, and each type of factor analyzed in detail. The factor that the trends of coal demand change in future for the scale of the coal logistics center is considered in this analysis.

After the factors that affect the coal logistics center planning is determined. The model of coal logistics center planning is constructed, the model used to solve the main part of coal logistics center——the scale of coal storage yard. When constructing the model, this paper fully considered the capacity restriction of coal mine in upstream of the coal logistics network, the capacity restriction of transport channel, the demand of lower power plant and the characteristics of coal, besides, the demand for the development of coal logistics center in the future.

After the certainty model of coal logistics planning is constructed, combining the case study of Electric Power Limited Liability Company A in region E, and then solved the scale of coal logistics center about three-year, five-year and ten-year in region E, and analyzing the advantages of planning scale based on demand trends by comparing the result which without considering the scale of demand trend.

References

Chen, S.D., & Liu, X.M. (2005). Calculating the size of a distribution park by the space-time consumption method. *Journal of Highway and Transportation Research and Development*, 22, 142-144.

Guan H.Z., et al. (2005).A Method on forecasting the scale of a logistics center. *China Civil Engineering Journal*, 5, 96-99.

Taniguchi E., et al. (1999).Optimal size and location planning of public logistics terminals. *Transportation Research Part E*, 35, 207-222.

Zhao K. (2001). Plan for the establishment of coal distribution center. *Shipping Management*, 11, 15-18.

Zhao, Q.L., Wang, J.Q., & Liu, H.Z. (2004). Demand and potential demand analysis of the logistics development. *China Soft Science*, 2, 92-95.

Zhang, X.Z., & Yin, S.L. (2006). The research of method of optimizing the scale of logistics distribution center. *Journal of Transportation Systems Engineering and Information Technology*, 6, 95-97.